This is just my implementation, it worked for me on the bench but no promises!

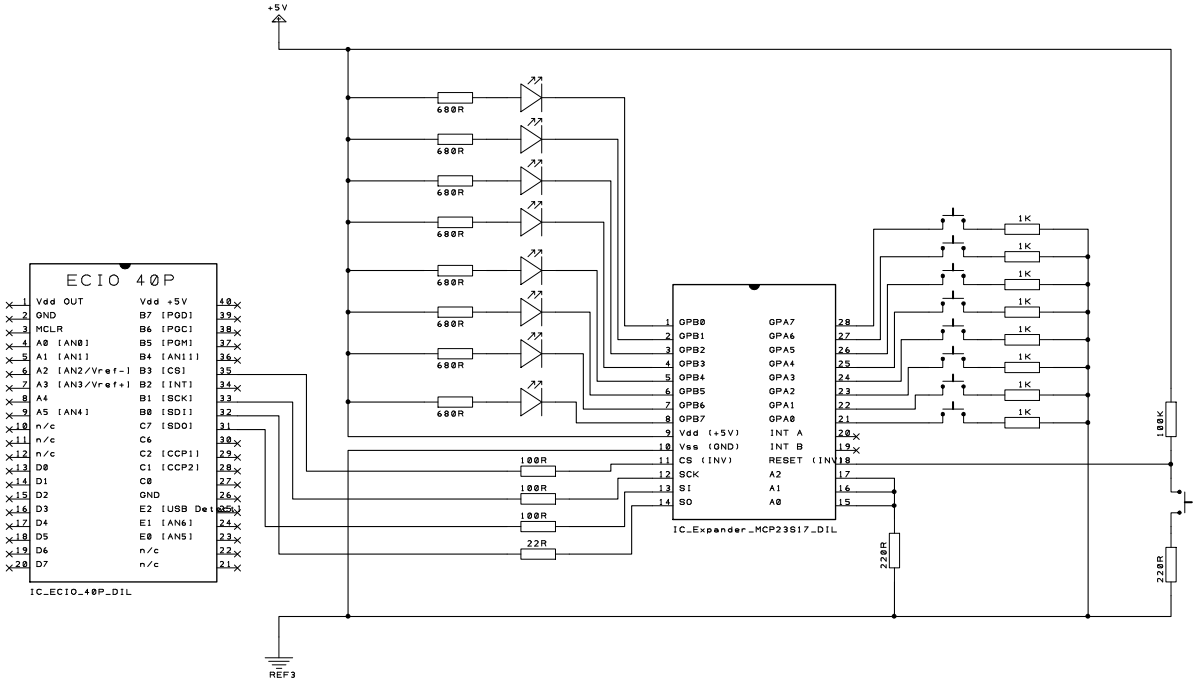

NOTES

> Support Circuitry for ECIO 40P not shown, EB061 base board used in bench test.
> ECIO SPI pins SDI and SCK are on Port B, SPI pin SDO is on Port C pin C7
> Used pin B3 for Chip Select and reserved pin B2 for Interupt but did not use.
> SDI and SDO pins between devices need to be paired, i.e. cross over type connection.
> Inline resistors for SPI lines chosen to suit specific application. See addtional note #1.
> Led current limiting resistors chosen to give about 10mA @ 5V.
> Address pins A0,A1,A2 all pulled low to give address of 0. Pull high as required for alt address.
> Reset button shown but not used but pin must still be weakly pulled high.
> Used resitor, LED and DIP switch arrays to keep demo board compact and quick to assemble.
> Interupt not used and INT pins left floating, seems to be weakly pulled high internally by default.

ADDITIONAL NOTE #1

SPI Inline resistors - a bit of Trial and Error but I got it to work.
The SPI lines were monitored with scope to view pulse shape.
Scope leads calibrated to help ensure accurate scope reading.
Inline resistors help 'damp' ringing at the pulse edges.
Too high a value resistor and pulse will become too 'rounded'.
Too small a value resistor and pulse may be too noisy.
In my application, 100R worked well for ECIO's SCK, CS and SDO.
However ECIO SDI, i.e. MCP23S17's SDO line needed to be much lower.
22R found to work, assume MCP23S17 cannot drive larger values, with bigger values the edge was fine but the pulse would not pull high enough to give a valid signal.

ADDIOTIONAL NOTE #2

Using Seans original FlowCode example and Microchip datasheet.
Table 1-6 hex addresses worked.
Used IODIRA 0x00 and IODIRB 0x01 to set function of Ports
Used IOCON 0x0A at start of program to set HAEN bit high to enable addressing, however the device was hard coded to address 0 so not really essential.
Used GPPUA 0x0C to set all of my PortA inputs to enable the internal weak pull up.
Read back from GPIOA 0x12 to get status of inputs.
Wrote to GPIOB 0x13 to set LEDs

E	D	C	B	A	Drawn JDW	Check By YOU!	Projection Do Not Scale	HOPE IT HELPS. :-) J.
Drn	Drn	Drn	Drn	Project MY Matrix ECIO Projects			Client	
Chk	Chk	Chk	Chk	Title ECIO to MCP23S17 Expander IC			Filename	Drawing No. / Sheet of

OTL1