MATRIX

MECHANICAL ENGINEERING

SET SCIENCE ENGINEERING TECHNOLOGY

Excellence in education for over 25 years

www.matrixtsl.com

MECHANICAL ENGINEERING

We are pleased to present a new range of fundamental mechanical engineering solutions, designed to meet the needs of students who need to learn key principles of various common subjects.
Our fundamental mechanics solutions comprise of equipment suitable for the learning of Statics, Materials, Dynamics, Linear and Rotational Dynamics with data-logging and Thermodynamics. These affordable kits can be easily packed away and stored and cover the key topics studied by students in an engineering course at school, college or in the foundation years of university.

We have also introduced equipment for the study of seven Structures related topics in mechanical engineering. These kits are rugged, portable and storable, with built-in data acquisition via USB meaning students' can output data directly into excel or further experimental analysis and simulation.
All of the new mechanical engineering kits we have introduced come with full curriculum, with worksheets accessible free of charge in the Learning Centre.

Fundamental MECHANICS

The fundamental mechanics range of equipment that allows students to study the principles of mechanical engineering required in many engineering related courses.

Three kits are available in the main fundamentals range, covering Statics, Materials and Dynamics fundamentals, meaning students can study a total of 14 experiments. A complete set combines all three in to one easy to use, robust and storable education system. These kits comprise of a rugged metal work panel, with removable legs, all of which store in the provided trays. The experimental components are hard-wearing and high quality, meaning they stand up to the rigours of an educational lab.

Further to this, we are also able to provide experimentation kits for the study of Linear and Rotational Dynamics with data-logging and Thermodynamics principles.

All kits in this range come in storable trays, meaning portability and storability are taken care of for the user.

Statics Fundamentals

This set of equipment covers the needs of students studying forces, moments, beams and more. Students use the storable work panel (included) to construct a range of experiments, which allow you to study a full course in static engineering systems. A full 10-hour workbook is included free of charge in the Learning Centre for this kit.

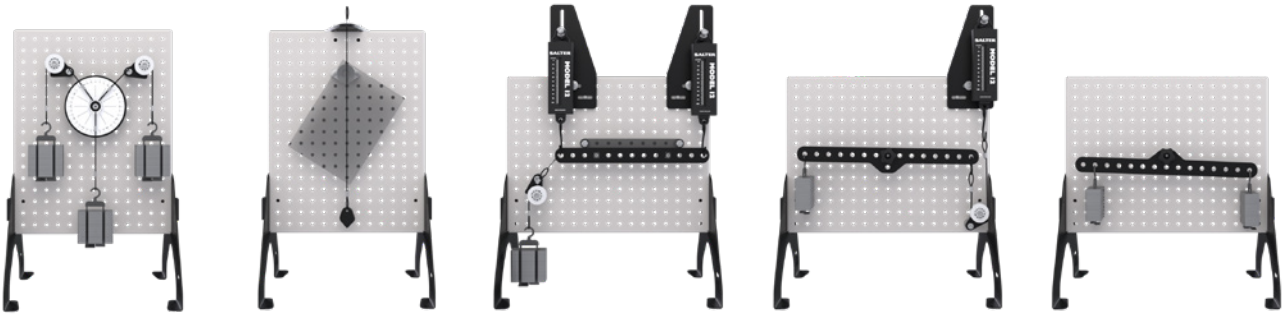

Learning objectives / experiments:

- Forces (mass, force, weight, combining, parallelogram, triangle and polygon
- Centre of gravity
- Units of weight and mass
- Free body diagrams
- Force vectors
- Coplanar forces
- Bow's notation
- Principles of moments and moment of forces
- Distinguishing between moments and torque
- Equilibrium of forces
- Levers and the term mechanical advantage
- Simply supported beams
- Concentrated and uniform distributed loads
- Different types of pinned supports

SCAN TO VISIT PRODUCT PAGE

Ordering information	
Statics Fundamentals	FM1883

Materials Fundamentals

This set of equipment covers the needs of students studying torsion, stress and strain, elastic constants, Young's Modulus and more. Students use the storable work panel (included) to construct a range of experiments, which allow you to study a full course in material principles. A full 10-hour workbook is included free of charge in the Learning Centre for this kit.

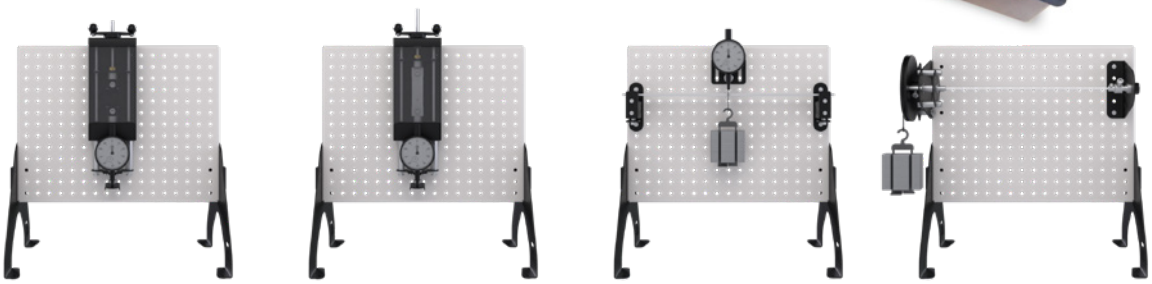

Learning objectives / experiments:

- Torsion of rods
- What effect has Polar second moment of area on torque and modulus of rigidity
- What effect has torque, shape, length and material on rod deflection
- Tensile test using plastic, aluminium and mild steels
- Understand the terms stress and strain
- Introduction to Youngs modulus for different materials
- Terms elastic deformation and plastic deformation
- Terms yield strength and ductility
- Shear force tests
- Shear stress and shear strain
- What effect has second moment of area on beam deflection
- What effect has load, shape, length and material on beam deflection
- Different types of supports for beams

SCAN TO VISIT PRODUCT PAGE

Ordering information	
Materials Fundamentals	FM1292

Dynamics Fundamentals

This set of equipment covers the needs of students studying pulleys, static and sliding friction, mechanisms and energy conversion. Students use the storable work panel (included) to construct a range of experiments, which allow you to study a full course in dynamic engineering systems. A full 10 hour workbook is included free of charge in the Learning Centre for this kit.

Learning objectives / experiments:

- Kinetic and gravitational energy parameters and principles
- Dynamic parameters and principles
- Newton's Law of Motion
- Mechanical efficiency and advantage
- Flywheel experimentation
- Toggle mechanisms
- Single and compound Pulley experimentation
- static and sliding friction on Inclined planes (with frictional surfaces and rollers)

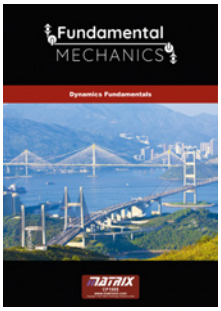

SCAN TO VISIT PRODUCT PAGE

Ordering information	
Dynamics Fundamentals	FM3935

Complete Fundamentals

This full set of equipment allows students to understand the principles of fundamental statics, materials and dynamics engineering systems in one portal set of equipment.

Included in this equipment are the full contents of the following kits:

Statics fundamentals
Materials fundamentals
Dynamics fundamentals

The user receives everything in neat, Gratnell's trays and each solution includes a work panel (3 in total). Three, 10- hour workbooks are included free of charge in the Learning Centre for this kit.

SCAN TO VISIT PRODUCT PAGE

Ordering information	
Complete Fundamental Mechanics Kit	FM9458

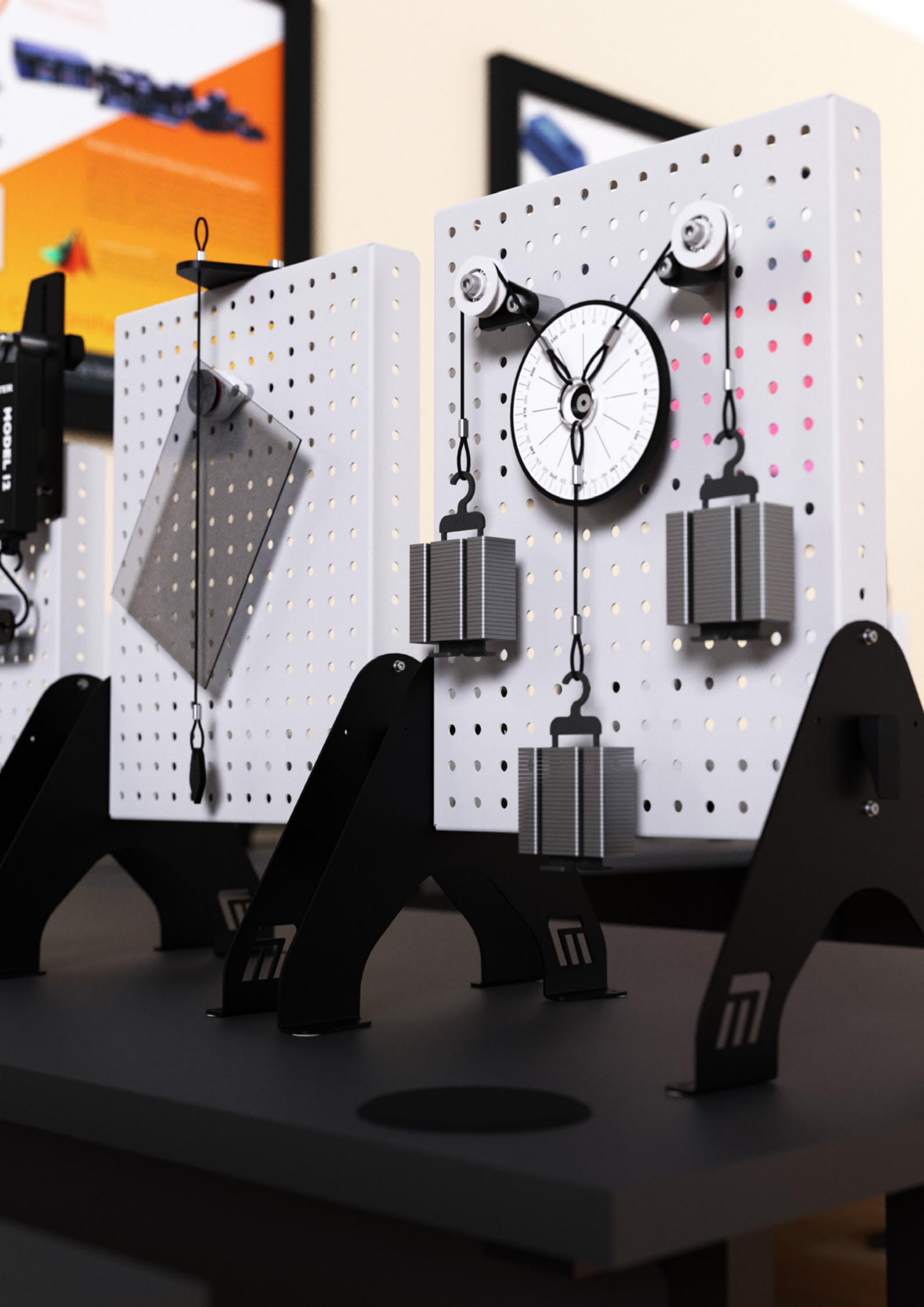
MODEL 11

Linear and Rotational Dynamics

This kit includes a dynamics track, handheld datalogger with LCD screen, and a range of sensors and accessories that allow students and teachers to carry out a range of experiments in dynamics. The datalogger can be used independently of a PC for many experiments with data automatically passed to Excel for further analysis. The datalogger has a VGA output which makes the equipment perfect for classroom demonstrations. The equipment is supplied with a suite of worksheets and teacher support material.

The datalogger included is fully self-contained and has a VGA output for connection to a projector for class demonstrations.

Learning objectives / experiments:

- Parameters of Kinetics: displacement, velocity, acceleration
- Equations of motion
- Parameters of dynamics: inertia, acceleration, force, momentum, mechanical work and power
- Newton's laws of motion, conservation of momentum and energy
- Linear and angular motion
- Rotational dynamics
- Simple harmonic motion

SCAN TO VISIT PRODUCT PAGE

Ordering information	
Linear and rotational dynamics	HP5099

Thermodynamics Kit

This kit allows engineering students to carry out a wide range of practical experiments in Thermodynamics to help them understand the temperature related behaviour of mechanical systems. The kit includes experimental apparatus including metal blocks with heating elements, linear rods with heaters, Leslie cube and Jolly bulb. The kit also includes measuring instruments such as digital thermometers, energy meter, and infrared thermometer. A downloadable manual covers all experiments and includes teacher's notes. A unique feature of the kit is that all the experiments can be completed just with electricity as the heat source – no Bunsen burner is required.

Learning objectives / experiments:

- Heat capacity of liquids
- Heat capacity of solids
- Linear expansion of heat
- Heat absorption
- Heat radiation
- Expansion of gases – Charles' law
- Boyle's law

SCAN TO VISIT PRODUCT PAGE

Ordering information	
Thermodynamics kit	HP4159
Corresponding curriculum	CP4261
You will also need	
Source - DC PSU, AC PSU and signal generator	LK6999/LK2975

STRUCTURES

These new kits for the **study of structures** cover seven commonly taught principles of structures across college and universities worldwide, in the subject area of mechanical engineering.

Each of the seven kits in this range feature a robust, metal work panel which is fitted with removeable legs (which can attach to the reverse of the panel for storage purposes). A carry handle and plastic moulded cover is also supplied to protect the system from any damage when not in use.

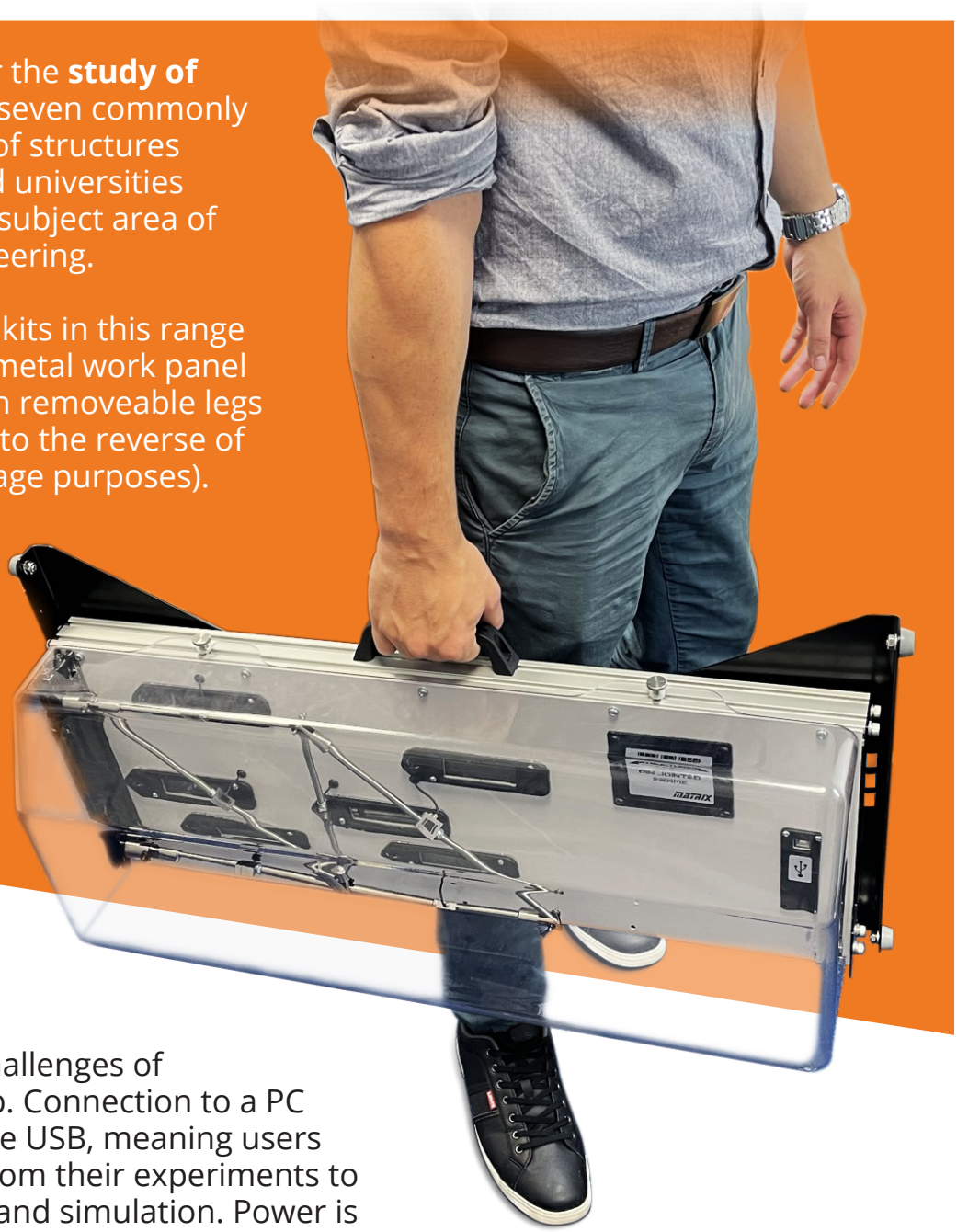

The experimental components are rugged and designed to stand up to the challenges of an educational lab. Connection to a PC is through a simple USB, meaning users can export data from their experiments to excel for analysis and simulation. Power is provided through the PC connection or through connection to a simple wall plug.

Each work panels are also supplied with built in LCD's which are connected to the on-board controller, in order to provide the user with a manual method of collating results from their experiments.

Bending Moments

This kit allows students to apply loads to hangers suspended along a beam, held between two supports. One support allows rotational movement, acting as a pinned support, whilst the other allows translational movement, acting as roller support. A load cell measures the bending moment due to the load applied by the student and students' can then create positive and negative bending moments.

Point loads and uniformly distributed loads can be applied across the beam in order for students to gain experience of various different situations for their experimentation.

An integrated load cell measures the force applied across the cut and is displayed on the built in LCD display. The display has a push button zero feature for experimental setup.

The experiment is powered by a USB cable to PC or wall plug. If the USB is connected via a PC port, data acquisition can be output directly into excel or further experimental analysis and simulation.

Learning objectives / experiments:

- Bending moment at the cut due to a varying single point load
- Bending moment at the cut due to a moving single point load
- Bending moment at the cut due to a uniformly distributed load
- Bending moment at the cut due to a point load and uniformly distributed load in superposition

Ordering information	
Bending Moments	ST8801
Corresponding curriculum	CP1843

Shear Force

This kit allows students to apply loads to hangers suspended along a beam, held between two supports. One support allows rotational movement, acting as a pinned support, whilst the other allows translational movement, acting as roller support. A load cell measures the bending moment due to the load applied by the student and students' can then create positive and negative shear force.

Point loads and uniformly distributed loads can be applied across the beam in order for students to gain experience of various different situations for their experimentation.

An integrated load cell measures the force applied across the cut and is displayed on the bult in LCD display. The display has a push button zero feature for experimental setup.

The experiment is powered by a USB cable to PC or wall plug. If the USB is connected via a PC port, data acquisition can be output directly into excel or further experimental analysis and simulation.

Learning objectives / experiments:

- Shear force at the cut due to a varying single point load
- Shear force at the cut due to a moving single point load
- Shear force at the cut due to a uniformly distributed load
- Shear force at the cut due to a point load and uniformly distributed load in superposition

Ordering information	
Shear Force	ST4484
Corresponding curriculum	CP4708

Reactions of a Simply Supported Beam

This product allows student to explore the behaviour of reaction forces on beam with supports. Two 'simply supported' supports are attached to load cells so that a precise measure of reactional force can be measure for a loading parameter.

The load cell output in connected to the LCD displays and the USB interference for data acquisition, for further experimental analysis.

The beam has a measure indicator for accurate distance measured between supports, while both support blocks can slide along the rail for exploring the behaviour of varying length.

The beam has incremental pins for hanging weights on at different places to create different point loads and can balance the weights on top to create uniformly distributed loads. Overhanging point loads can be achieved too to create negative reaction forces to show direction of forces. This allows student to explore reactional forces that are positive and negative and the principle of superposition.

Learning objectives / experiments:

- Reactions due to point loads
- Reactions due to UDL's
- Reactions due to overhangs
- Reactional force change due to varying distance between supports.

Ordering information	
Reactions of a Simply Supported Beam	ST0454
Corresponding curriculum	CP3604

Bending Stress

The bending stress structures product provides students with a beam with 4 strain gauges attached to it. These strain gauges are then connected into the back panel allowing simple 4mm banana plug socket connections to conduct the experiment.

The experiment explores the bending stress in a beam with applied loads. Using equations for bending deflection and stress, the theoretical value can be compared to the output of the experiment. The strain gauges can be connected up using the 4mm banana cables into 3 different Wheatstone bridge configurations. Student can then explore the behaviour of a quarter bridge, half bridge and full bridge configuration. High precision resistors are used to make up the Wheatstone bridge in the absence of a strain gauge.

The LCD display shows the millivolt change of the output from the Wheatstone bridge. With a zero button to reset the experiment.

The experiment is powered by a USB cable to PC or wall plug. If the USB is connected via a PC port, data acquisition can be output directly into excel or further experimental analysis and simulation.

Learning objectives / experiments:

- Stress and strain relationship
- Strain gauges as instruments
- Finding the neutral axis by experiment and calculation
- Quarter, half and full Wheatstone bridge applications, with advantages and disadvantages

Ordering information	
Bending Stress	ST5671
Corresponding curriculum	CP1877

Deflection of Beams

This kit allows students to utilised a range of beams in order to understand the elastic properties of beams and cantilevers.

Beams can be fitted to one support to form a cantilever, or between two supports with different fixing methods, forming simply supported and fixed or 'encastre' beams.

Students apply loads and measure the deflection. This product includes a set of 'specimens' of different metals for comparison of the elastic properties. It also allows the student to vary the length of the beam to see how this affects the magnitude of deflection for a given load.

The Digital Mitutoyo dial has its own display, but it is connected to the USB interface so data acquisition can occur across the USB cable

Learning objectives / experiments:

- Beam bending formula
- Deflection due to point loads and UDLs (uniformly distributed loads)
- How beam fixings affect deflection of: Simply supported beams, Fixed or 'encastre' beams, Cantilever beams, Propped cantilever
- Shape of a deflected beam
- Beam length and deflection
- Beam material and deflection — the elastic (Young's) modulus
- Beam cross-section and deflection — the Second Moment of Area ('I' value) – and material stiffness

Ordering information	
Deflection of Beams	ST9544
Corresponding curriculum	CP1879

Torsion of Rods

This kit allows students to understand the torsional elastic properties of rods. Students choose from a selection of test rods and fit them to the experimental work panel. They can adjust the distance between the chucks for tests on varying rod length. Each chuck includes pointers that work with the scale on the platform for accurate positioning.

Students apply angular deflection to the specimen using a chuck which includes a precision potentiometer to measure the angular deflection, which is then displayed on the LCD display. The other chuck connects to a load cell to measure the resulting torque, which is displayed on the other LCD display. Students use textbook beam equations to predict the deflection and torque relationship and compare the calculated results with the measured results. This helps confirm the reliability of the textbook equations and the accuracy of the experiment results.

This product includes a set of rods of different metals for comparison of the elastic properties, dimensions and polar second moment of area ('J' value). It also allows the student to vary the effective length of the rods to see how this affects the magnitude of deflection for a given torque.

The angle and load cell output is connected to the USB interference and can have the data acquisition through the USB cable.

Learning objectives / experiments:

- Torsion formula
- Rod length and angle of twist relationship
- Rod material and angular deflection—the elastic (shear) modulus (G)
- Rod cross-sectional dimensions and torsion—the polar second moment of area (J)

Ordering information	
Torsion of Rods	ST0386
Corresponding curriculum	CP8231

Pin Jointed Frameworks

This kit allows students to apply loads in different places on the pin joint framework to explore the tension and compression forces within each structure member. 6 load cells on each of the 6 structure members is connected directly to an LCD display for the output and to the USB inference for data acquisition.

Zero buttons next to the LCD display allows for student to zero the load cell output and setup the experiment each time.

Two hanging positions allow for students to explore the idea of redundancy in frameworks and how load is transmitted though the system. A magnetic pulley allows for students to applied angles loads as well.

Students will learn to analysis the structure members using method of joints and method of sections, while using bow's notation.

Learning objectives / experiments:

- Method of joints
- Method of sections
- Bow notation's
- Principle of superposition for multiple loads redundancy

Ordering information	
Pin Jointed Framework	ST6365
Corresponding curriculum	CP8026

www.matrixtsl.com

SCIENCE
ENGINEERING
TECHNOLOGY

Matrix Technology Solutions
The Factory, 33 Gibbet Street, Halifax, HX1 5BA, United Kingdom
t: +44 (0) 1422 252380 e: sales@matrixtsl.com