ELECTRONIC WORKSTATION

User Guide

Contents

CE certification:
EN 60950-1: 2001+A11:2004
EN 55022: 2006 Class B
EN 55024: 1998+A1: 2001+A2: 2003

FCC certification:
ANSI C63.4 (2003)
CISPR 22: 1997+A1: 2000
ICES-003: 2004

The Electronic Workstation

The Electronic Workstation is a multifunction electronics workbench for electronic engineers. It combines a number of instruments that make the development and learning of electronic systems easier.

- Multiple instruments
- Small desk top space
- E-blocks compatible

The Electronic Workstation consists of a number of virtual instruments housed in a rigid plastic case. The front panel of the Electronic Workstation has two analogue oscilloscope inputs, a signal generator output, 8 channel logic analyser / digital signal generator connectors, 8 channel PC interface connectors which support use with LabView, Visual Basic, C etc. and power supply outputs.

The angled top of the unit is fabricated from strong anodised black aluminium, with a grid of holes which make it suitable for use with E-blocks. This lifts up to reveal a storage area for leads and accessories. The oscilloscope inputs and signal generator output are presented of standard 50 ohm BNC connectors. The range of leads supplied with the Electronic Workstation includes: 1 x USB lead, 2 x 9-way D-type leads, 2 x 50 ohm scope probes, 10 x 2mm micro gripper analyser probes and 25 x backplane mounting pillars and red and black 4mm 'banana' leads.

Compact Workstation

A compact version of the Electronic Workstation is also available, which folds down flat for ease of portability. A carry case is included with the Compact Workstation, with storage space for accessories and instruments.

The complete Compact Workstation kit

Power supply

The triple rail power supply has +12V, +5V and -12V outputs with plenty of current on tap for use with motor and actuator circuits. It also simplifies testing dual power rail design.

Oscilloscope

The PC based oscilloscope offers many more functions than are available on a budget CRT scope. Each of the two input channels can be displayed at the full size of your PC monitor, and precise readings of voltage, timing and frequency can be taken with a few mouse clicks. Multiple trigger models ensure that you will always capture the part of the signal that you need to see.

Digital analyser

The digital analyser has eight channels, each of which can function as a digital input or output. As well as showing graphs of signals vs. time for each input, it is possible to designate groups of channels to be a variety of serial data busses can be decoded and displayed as annotated data, addresses, status and timing information. Capture can be triggered by any combination of low and high levels from any number of inputs, and there is also a socket for external triggering. When used as outputs, the channels can send a user defined sequence of bits, or even replay data recorded via the inputs. A clock output ensures that the circuit under analysis can be perfectly synchronised to the test signals.

PC interface

The custom PC interface is based around a USB-reprogrammable PICmicro microcontroller. This can be programmed using Flowcode, C or Assembly to be a custom test instrument or a controller. The front panel socket can be configured to give access to a wide array of functions, including pulse width modulation, analogue to digital conversion and serial communication buses.

USB hub

An integral USB hub means that all of these instruments require only one free USB port on your PC; and there is also a spare USB output on the unit for programming microcontrollers or prototyping USB circuitry.

Ordering information

Electronic Workstation

Ordering information	
Electronic workstation UK	HP886UK
Electronic workstation EU	HP886EU
Electronic workstation USA	HP886USA

Compact Workstation

Ordering information	
Compact workstation with case UK	HP834UK
Compact workstation with case EU	HP834EU
Compact workstation with case USA	HP834USA

The workstation casing is constructed from tough impact-resistant black ABS. A metal backplane, sloped at an ergonomic angle which allows mounting of PCBs, forms the top panel of the unit. The 20mm grid of M3 holes is compatible with the E-blocks range of products. In the standard model, a hinge at the rear allows access to the internal storage area, which has ample space to store the power supply, cables and test probes when the unit is not in use.

Three supply voltages are available; 5V at up to 5A, +12V (2A) and -12V (0.8A). The outputs are all on combined 4mm 'banana' sockets and binding posts, making it easy to power several devices at once. Power comes from a regulated switched mode PSU, fully protected against overloads and short-circuits. The PSU connects via a 5-pin DIN socket on the rear panel. The universal power supply can be used in any territory by simply connecting the appropriate IEC mains cable. A second 5-pin DIN socket is provided for powering accessories such as the HP512 Protostation.

The oscilloscope is connected using BNC connectors with a 1 Mohm impedance to accept industry standard probes (two supplied). The two independent channels accept signals up to ±20V. A third BNC connection provides an arbitrary waveform output which can generate a signal of up to 2V pk-pk with fixed or swept frequency for DC to 100kHz. The waveform can be selected from several standard shapes, copied from an input channel, or simply drawn on screen.

There are two ways to connect the digital analyser: each channel has its own 2mm socket to connect to the included micro-gripper test leads. Alternatively the 9-way D-sub connector can be used to connect to an E-blocks port with a ribbon cable, thus ensuring that the 8 data lines cannot be accidently cross connected. 2mm sockets are also provided for the analyser's external trigger input and clock output. All inputs and outputs are CMOS compatible (maximum 5.5V).

A second 9-way D-sub connector provides connections to a USB enabled PIC18F2455 microcontroller. The functions of the eight data lines on this microcontroller are programmable by the user, allowing great versatility. For example, it is possible to have 2 PWM outputs, 2 ADC inputs, an SPI bus and two interrupt inputs, all running simultaneously. The interface is easily customised using Flowcode, C or Assembly, and once programmed can run independently of the PC. Example firmware and a Windows DLL are provided which means that this interface can be used to provide a hardware front end for software developed in environments such as Visual Basic,

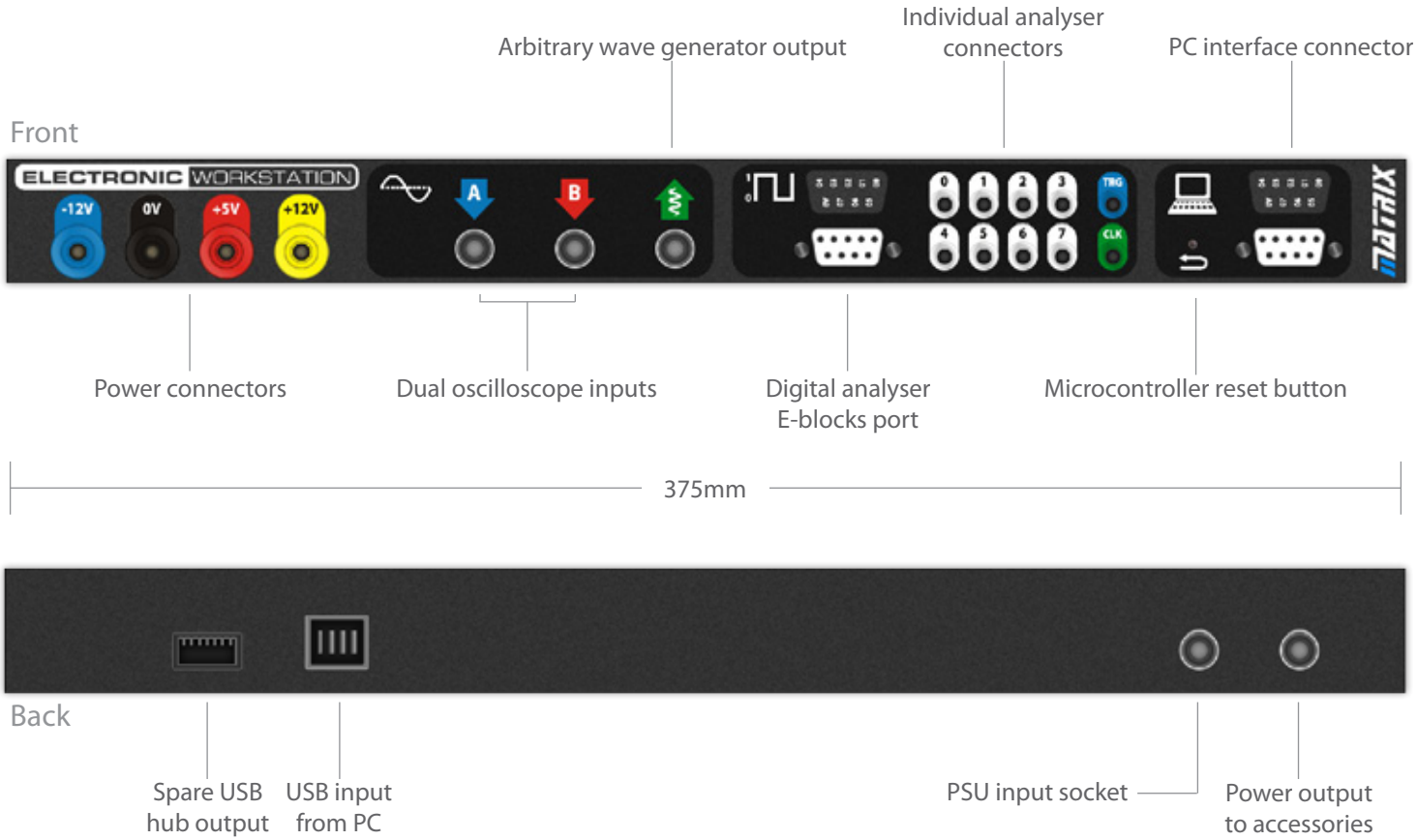

Workstation hardware

C++, or LabView. A front panel reset button is provided for hardware initialisation.

A single USB type B socket at the rear connects all of the instruments to a PC, thanks to the internal USB hub. An output from the hub on a USB A connector is also available for the use of circuits under test.

All of the cables and accessories required to use the Electronic Workstation instruments are included in the box. The oscilloscope probes are suitable for use with signals up to 60MHz and have an integral x1/x10 range switch. The micro gripper PCB probes are narrow and flexible enough to attach to high density IC pins, and can be stacked incredibly close together.

A pack of clip-on plastic pillars allow E-blocks to be securely attached to the metal backplane.

Included accessories

1	Universal power supply
1	IEC Mains cable
1	USB A to USB B cable
1	9-pin D-sub male to male cable
1	9-pin D-sub male to female cable
2	Oscilloscope probes
10	Micro gripper PCB probe leads
25	Backplane mounting pillars
1	Software CD ROM

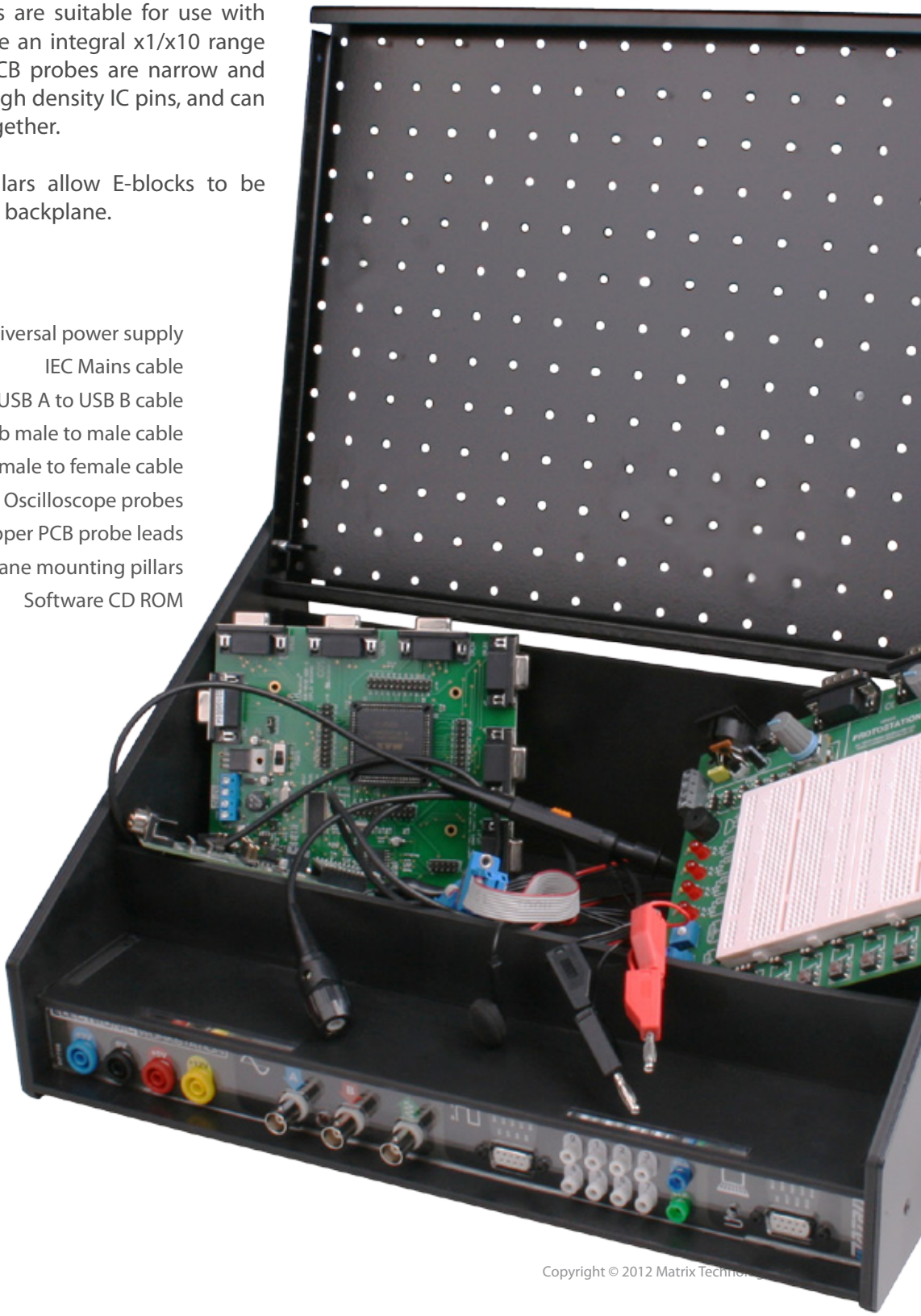

Protostation is the perfect complement to the Electronic Workstation. Together they form a complete electronics prototyping and analysis system that needs less desk space than an open textbook. Protostation can also be used on its own for the convenience of its integral signal sources and output devices.

- Large prototyping area
- Build circuits with no soldering or tools required
- Easy access to controls and transducers
- Make your prototypes more portable
- Free your work space from clutter

The Protostation feature 0.1" pitch sockets which take standard IC packages. It also contains 2 E-blocks ports, a versatile range of supply voltages, a signal generator and the following inputs and outputs:

INPUTS: Switches, potentiometers, phototransistor, thermistor, voltage source

OUTPUTS: LEDs, buzzer, relay

Protostation fixes securely to the backplane at the top of the Electronic Workstation. This results in a compact, portable and extremely sturdy prototyping system. Simply, unplug the Electronic Workstation power and USB cables and you can move your test circuit, power sources, instruments and interconnections as one complete unit with far less risk of disturbing anything. This makes the Electronic Workstation / Protostation combination ideal when your work space or classroom must serve varying functions, your project needs hiding out of harms way, or simply to make better use of space on your desk.

In order to make working with digital circuits simpler. Protostation has a built in clock generator that can provide a CMOS level clock signal from 10Hz up to 10kHz. A second output delivers a sine wave at the same frequency and with variable level (0-6V peak to peak, DC coupled); very useful for testing audio circuits.

The complete Protostation user guide and specification can be downloaded for free from our website.

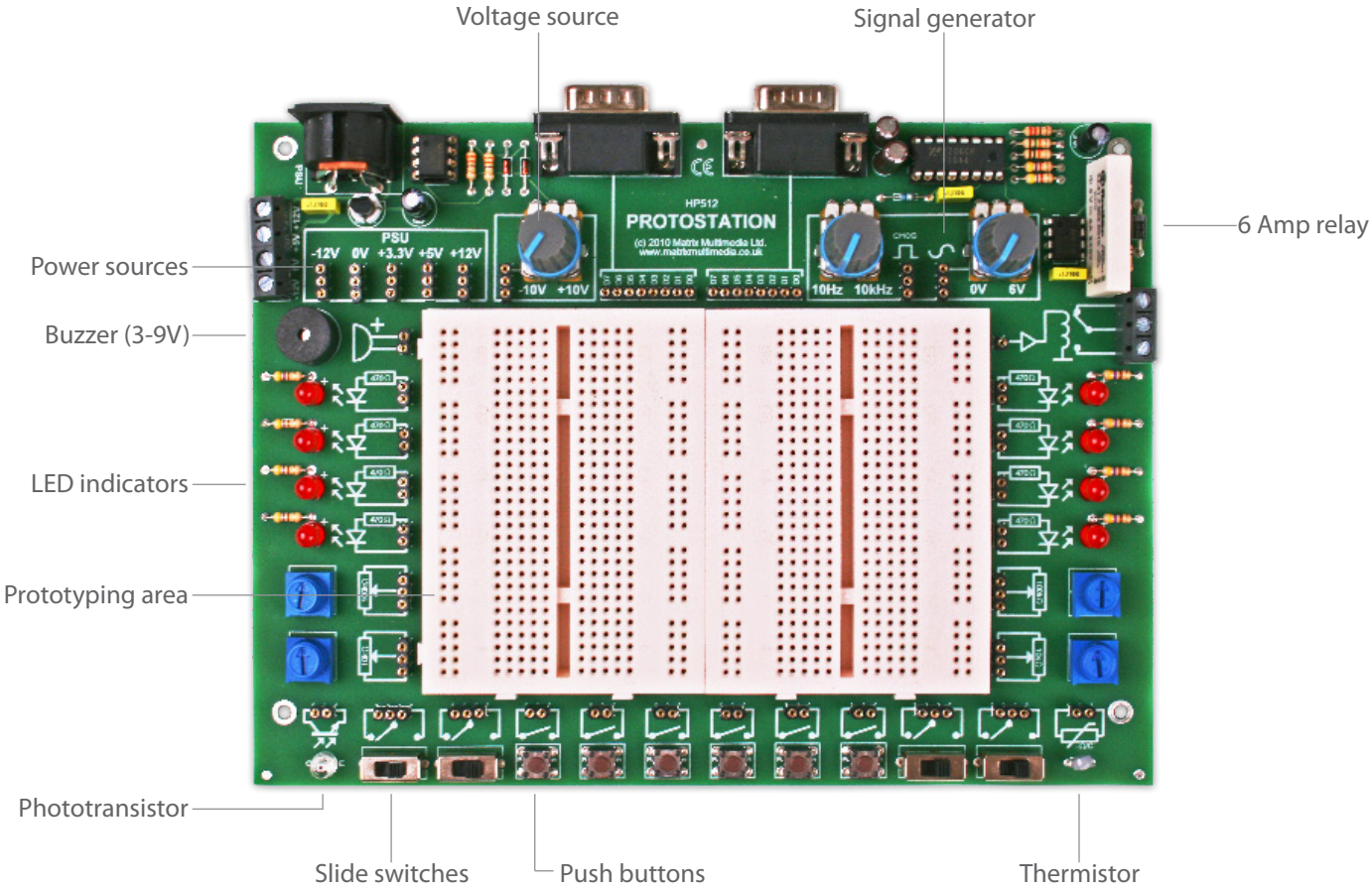

Ordering information

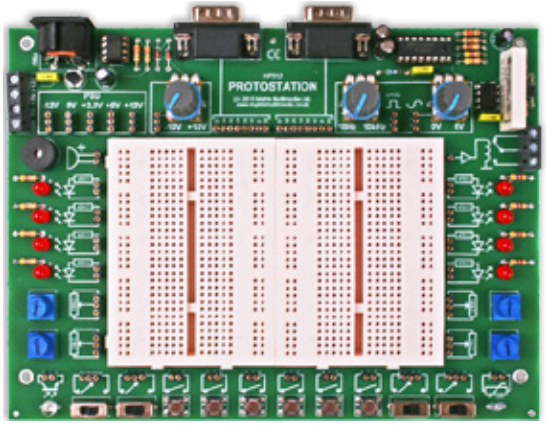

Protostation

Ordering information	
Protostation	HP512
+/- 12V power supply (inc UK IEC mains cable	HP8405
IEC mains cable (Europe)	HP3702
IEC cable (USA)	HP3703
5 pin DIN to 5 pin DIN power cable	HP655
Pack 150mm prototype leads	HP654

Drivers and software

The tools for using the instruments on the Electronic Workstation are PC based, so you will need to install some software and drivers before you can use all of the unit's functions.

To begin installation, simply run the installer provided on the CD ROM.

install.exe

This will install all of the hardware drivers and the Electronic Workstation launcher - from this you are able to install and run your choice of applications.

There are also a range of guides to help you get the most out of the Electronic Workstation, which can all be accessed from the file...

Electronic Workstation - Start Page.htm

...which you will find in the root directory of the CD ROM.

The disk also includes example files demonstrating the unit in use with LabView and Visual Basic, and diagnostic procedures for ensuring that everything is working correctly.

Oscilloscope

The oscilloscope uses the powerful PicoScope software developed by Pico Technology.

Digital analyser

The digital analyser uses CWAV Inc's USBee range of software.

PC interface

The included .dll files and the interface's pre-installed firmware make it simple to create your own software interfaces in a wide variety of programming environments including Visual Basic, LabView and C++.

At the heart of the PC interface is a standard PIC microcontroller, so it is also possible to use alternative firmware in order to customise the interface's capabilities. We recommend the PIC version of our own Flowcode software for creating PC Interface firmware. You can find out more about this software on our website:

www.matrixtsl.com

System requirements

To avoid disappointment, please ensure that the PC to which your connect your Electronic Workstation meets the following requirements:

Recommended System

CPU: Pentium IV 2GHz (or equivalent)
OS: Windows XP SP2, Vista or Windows 7
RAM: 256MB (XP), 1GB (Vista, Windows 7)
USB: USB 2.0 hi-speed port (480Mb/s)

Minimum System

CPU: Pentium II (or equivalent)
OS: Windows XP SP2, Vista or Windows 7
RAM: 64MB (XP), 512MB (Vista), 1GB (Windows 7)
USB: USB 1.1 full-speed port (12Mb/s)

If your PC does not meet the recommended system requirements, the sampling rates of the oscilloscope and digital analyser may be restricted, especially if using USB ports slower than USB2.0 hi-speed.

The Electronic Workstation should always be connected directly to a USB port on the host PC - the unit may not function correctly if connected via an external USB hub.

In addition, performance will be better if you have the latest service packs and hotfixes for your operating system installed. These are freely available from Microsoft using Windows Update.

Customer support

We are happy to provide you with any help that you need to get the best from your Workstation. You can connect us via email, telephone, fox or in writing - our contact details can be found at the end of this document.

The user forum

It's not just our engineers who can help you out. Register on our forum to access the hugh knowledge base of other users. This service is completely free of charge.

http://www.matrixtsl.com/mmforums/index.php

Here you can find:

- Practical examples of our products being used in a wide variety of applications
- Articles and discussions about microcontroller technology, programming and electronics
- Software routines and add-ons for Flowcode, Visual Basic and LabView
- Experienced users sharing their expertise, and with whom you might collaborate on shared products
- The latest news about new products and services

You could even win free Matrix products for contributing articles to our forum that are particularly useful to us and our customers.

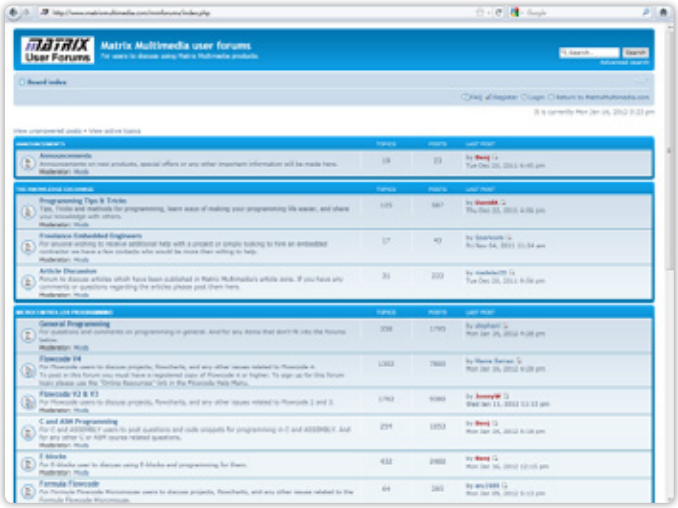

The Matrix TSL forums

Using a PC monitor to display oscilloscope traces makes for a much more user-friendly experience. You can arrange traces on screen in any way you choose, zoom in on areas of interest and make easy comparisons with reference waveforms. You can even simulate the persistence of CRT phosphors to make small changes to the trace easier to spot.

- Simpler to use than a traditional oscilloscope
- Much safer than a cathode ray tube
- Large on-screen display
- No extra desk space required
- Two simultaneous traces
- Versatile triggering modes
- Frequency analyser
- X, Y display mode
- Test signal generator
- Precise measurements
- User definable GUI style

The two trace inputs can have their voltage range set from 50mV/div to 20V/div. An automatic setting makes it simple to find the right range for unpredictable signals. Signals are normally sampled with 8 bit accuracy , and there is also a high-definition 12 bit mode.

The software provides all of the features of an expensive storage oscilloscope. Capture multiple traces for viewing at any time or save them to a disk to use in other applications; recall them later to see how modifications have changed circuit behaviour.

The spectrum view allows analysis of frequency response with exactly the same ease of use as the oscilloscope traces and high bandwidth.

Precise measurements can be taken with just a few mouse clicks, and you are not just limited to measuring time and voltage Frequency, pulse width, power, averages, RMS and peak reading can all be generated.

Traces can be free running or the versatile triggering system can be used. Triggers can be taken from any trace and the user can define trigger level and direction. It is even possible to use pre-triggering so that you can see some of the waveform prior to the trigger.

The oscilloscope can also generate test signals. There is a choice of sine, ramp, square and triangle output waveforms, user defined wave shape, or it can replay a previously recorded trace. Amplitude can be controlled from 0.2V peak to peak with variable DC offset. The frequency ranges from DC to 100kHz, and can be either fixed or swept at a user definable rate.

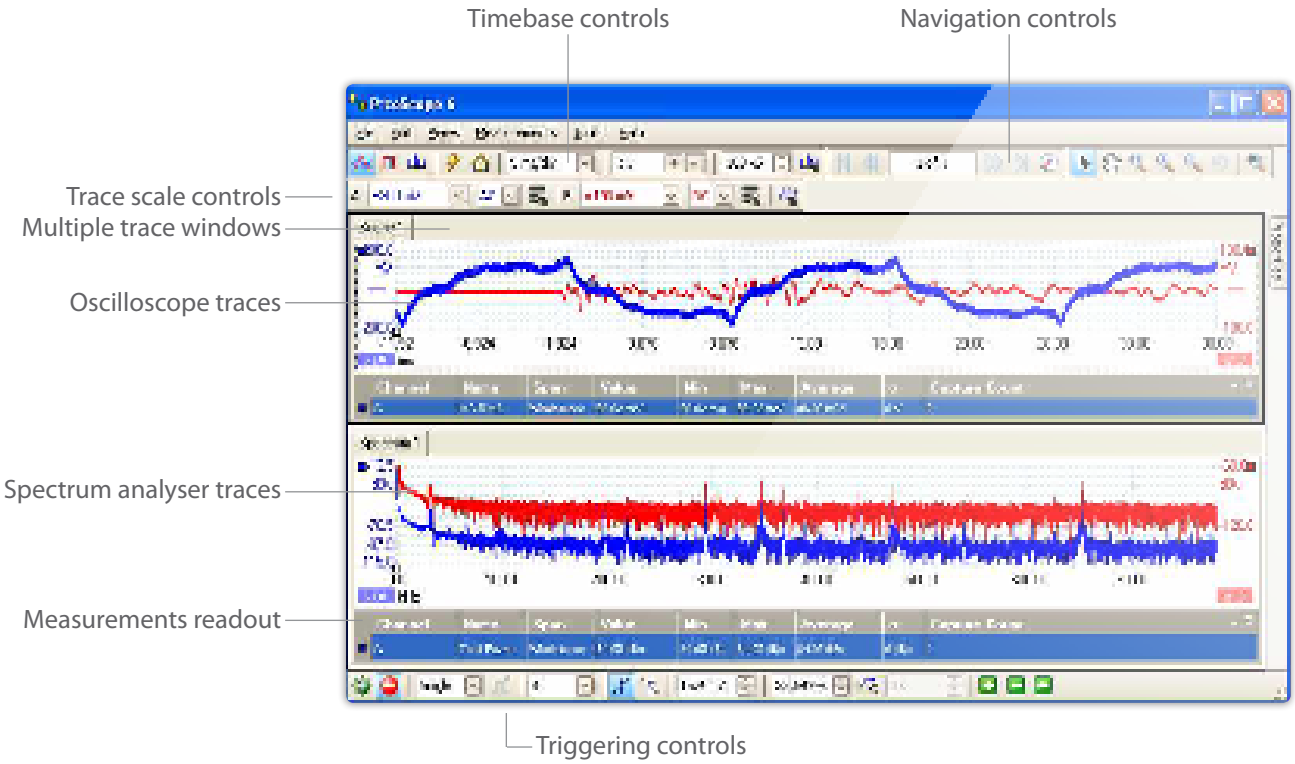

The digital analyser

The digital analyser is capable of recording the activity on all eight of its channels simultaneously at up to 24 million samples per second, so it is perfect for analysing modern high speed microcontrollers and serial communication buses.

- Detailed display of multiple signals
- Troubleshoot your serial data protocols
- Generate custom test signals
- Analyse signal timing
- Multiple time-aligned traces
- Serial bus decoding
- Accurate time and frequency measurements
- Records and replays signals
- Export data to other applications
- Versatile triggering

Channels can be analysed individually to generate an oscilloscope style trace. Alternatively, groups of channels can be assigned as the individual lines of a serial or parallel data bus which can then be read directly in hex or decimal format. Display zooming and resizing, together with the use of markers make it easy to concentrate on the most important part of the signal.

Data from busses can be decoded and shown in a separate window in a format appropriate to the protocol used, including timing signals, addresses and packet sizes.
The software currently supports I²C, SPI, Async, USB, CAN, IWire, PS/2, SMBus and I²S as standard. Tools are also available to customise this support for any other serial data protocol.

Signal capture can be triggered manually, from an external trigger input, or by any combination of high or low inputs on multiple channels. pre-triggering means that it is possible to see the status of channels prior to the trigger point.

An interactive measurement tool can calculate timing difference, frequencies and pulse widths for fast analysis.

Captured signals can be saved to disk and recalled at any time, and export is possible in alternative formats suitable for use in office and graphics applications.

Any combination of channels can also be defined as outputs. These can then send simple logic levels, user defined sequences of data or replay previously saved captures. A built-in clock generator ensures that circuits under test are perfectly synchronised to the data sent.

The micro-gripper probes included with the Electronic Workstation make simple work of connecting the analyser to even the smallest of IC packages. Alternatively, Matrix E-blocks can be attached using a single ribbon cable, ensuring that input channels 0 to 7 connect to the correct data lines every time.

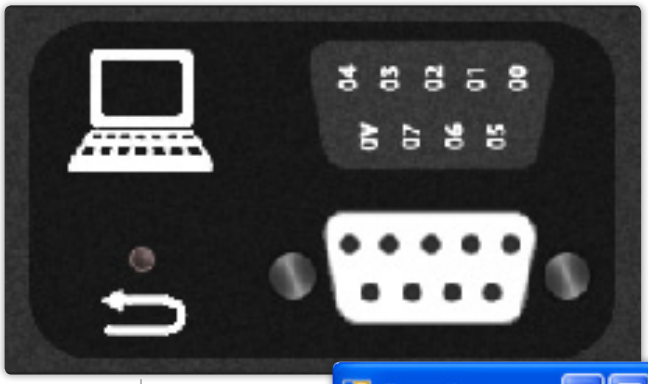

Reset

00 - RA0 / ADC0
01 - RAI / ADC1 / CS
02 - RB0 / MISO
03 - RBI / SCK
04 - RC1 / PWM1 / DAC
05 - RC2 / PWM2
06 - RC6 / TX
07 - RC7 / RX / MOS1
0V - 0V

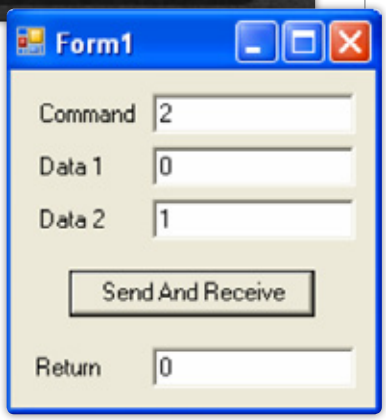

The PC interface consists of a Matrix ECIO28P module embedded within the Workstation with eight of its data pins conveniently brought out to a 9-pin D-sub socket on the front panel. The PIC18F2455 microcontroller on board the ECIO has a self-contained USB interface, analogue to digital converters, pulse width modulation outputs, and can send and receive several protocols of serial data. All of the ECIO connections have current limiting to avoid damage even if shorted directly to the power rails.

- Create you own test instruments
- Program your own control logic
- Hardware interfacing for custom software applications
- Data logging
- Great introduction to using microcontrollers
- Analogue to digital and digital to analogue conversion
- Pulse width modulation outputs
- Send and receive serial data
- USB re-programmable
- Non-volatile program memory
- Pre-programmed with bootloader
- USB data acquisition and control

Non-volatile flash memory can store programs even with the power and USB connections removed, enabling the creation and analysis of embedded systems. A front panel button allows easy program initialisation. Better still, you can achieve two way communication between the USB interface and the hardware inputs and outputs on the front panel. You can therefore create your own USB hardware devices and then use development tools such as Visual Basic and LabView to write the software to go with them. This gives endless opportunities for extending the Workstation's features, and is ideal for data acquisition and control technology projects.

Pre-installed firmware

The PC interface comes with firmware pre-installed so that it is ready for use straight out of the box. Together with the .dll files provided on the CD ROM, this provides access to a wide variety of interface features without requiring the user to program the interface.

- Use the 8 data lines in parallel to send and receive 8 bit data, or access each bit individually
- Read voltages from the two analogue to digital input channels
- Send PWM signals with variable frequency and duty cycle
- Set up a serial bus and use it to send and receive data
- Use the microcontroller's in-built SPI bus
- Set the voltage at the digital to analogue converter
- Use the DAC as a function generator with variable frequency and selectable wave shape

A detailed list of the available commands and their parameters can be found on page 12.

Customisation

If the pre-programmed firmware doesn't provide the function that you need, you can program the interface with your own.

We recommend our own Flowcode software for this purpose. This makes programming the interface very simple, as you won't need to write a single line of code - simply draw a flow chart describing your program, and have Flowcode generate the code for you.

Alternatively, you can use any development tool capable of targeting a PICmicro 18F2455 microcontroller. You just need to bear in mind that memory addresses below 0x800 are reserved for the bootloader required for USB interfacing. You will also find the following bootloader entry points useful to know...

- Reset vector, 0x800
- Interrupt (high priority) vector, 0x808
- Interrupt (low priority) vector, 0x8x818

Block diagram

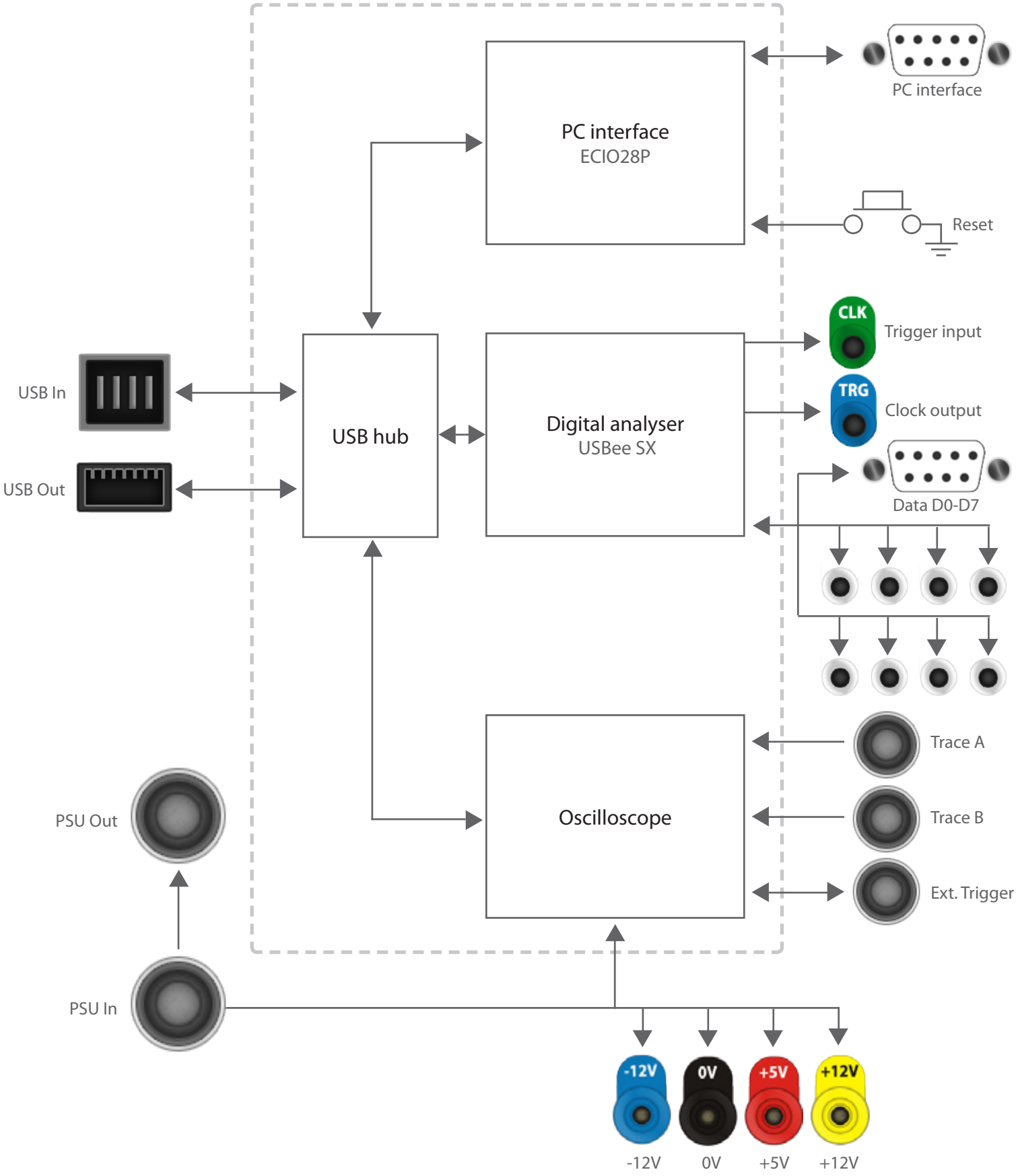

PC interface - commands list

Command function	Command	data 1	data 2	Return	Comments
Output 8-bit	**1**	8-bit data (0-255)	N/A	N/A	
Output bit-0	**2**	1-bit data (0-1)	N/A	N/A	
Output bit-1	**3**	1-bit data (0-1)	N/A	N/A	
Output bit-2	**4**	1-bit data (0-1)	N/A	N/A	
Output bit-3	**5**	1-bit data (0-1)	N/A	N/A	
Output bit-4	**6**	1-bit data (0-1)	N/A	N/A	
Output bit-5	**7**	1-bit data (0-1)	N/A	N/A	
Output bit-6	**8**	1-bit data (0-1)	N/A	N/A	
Output bit-7	**9**	1-bit data (0-1)	N/A	N/A	
Input 8-bit	**10**	N/A	N/A	8-bit data (0-255)	
Input bit-0	**11**	N/A	N/A	1-bit data (0-1)	
Input bit-1	**12**	N/A	N/A	1-bit data (0-1)	
Input bit-2	**13**	N/A	N/A	1-bit data (0-1)	
Input bit-3	**14**	N/A	N/A	1-bit data (0-1)	
Input bit-4	**15**	N/A	N/A	1-bit data (0-1)	
Input bit-5	**16**	N/A	N/A	1-bit data (0-1)	
Input bit-6	**17**	N/A	N/A	1-bit data (0-1)	
Input bit-7	**18**	N/A	N/A	1-bit data (0-1)	
Read ADC0	**19**	N/A	N/A	8-bit ADC value (0-255)	0=0V / 128=2.5V / 255=5V
Read ADC1	**20**	N/A	N/A	8-bit ADC value (0-255)	0=0V / 128=2.5V / 255=5V
PWM enable	**21**	Channel (1/2)	N/A	N/A	
PWM disable	**22**	Channel (1/2)	N/A	N/A	
PWM set duty	**23**	Channel (1/2)	Duty (0-255)	N/A	
PWM set period	**24**	Period (0-255)	Prescaler (1/4/16)	N/A	
Serial enable	**25**	N/A	N/A	N/A	
Serial disable	**26**	N/A	N/A	N/A	
Serial change baud	**27**	Baud rate (0-3)	N/A	N/A	0=4800bps / 1=9600bps / 2=19200bps / 3=38400bps
Serial send byte	**28**	Output byte (0-255)	N/A	N/A	
Serial receive byte	**29**	N/A	N/A	N/A	
SPI enable	**30**	N/A	N/A	N/A	
SPI disable	**31**	N/A	N/A	N/A	
SPI clock speed	**32**	Clock rate (0-2)	N/A	N/A	0=12MHz / 1=3MHz / 2=750KHz
SPI clock polarity	**33**	Clock idle (0/1)	Clock edge (0/1)	N/A	Idle: 0=idle low / 1=idle high :: Edge: 0=rising edge / 1=falling edge

PC interface - commands list

Command function	Command	data 1	data 2	Return	Comments
SPI chip select	**34**	Chip select (0/1)	N/A	N/A	0=0V / 1=5V
SPI send byte	**35**	Output byte (0-255)	N/A	N/A	
SPI receive byte	**36**	N/A	N/A	Input byte (0-255)	
DAC enable	**37**	N/A	N/A	N/A	
DAC disable	**38**	N/A	N/A	N/A	
DAC set output	**39**	Output voltage (0-255)	N/A	N/A	0=0V / 128=2.5V / 255=5V
DAC function generator mode	**40**	Mode (0-3)	N/A	N/A	0=SINE / 1=SQUARE / 2=TRIANGLE / 3=SAW
DAC function generator enable	**41**	Rate (0-5)	N/A	N/A	0=22Hz / 1=11Hz / 2=5.7Hz / 3=2.86Hz / 4=1.43Hz / 5=0.71Hz
DAC function generator disable	**42**	N/A	N/A	N/A	

Technical specifications

Power supply	
Connections	5-way DIN (PSU input), 4mm socket/binding post (power outputs)
Input	90V (2A) to 265V (1A), 47Hz-63Hz
Digital multimeter	Yes
Maximum output	-12V @ 800mA, +5V @ 5A, +12V @ 2A
2 channel oscilloscope	
Bandwidth	25MHz
One channel sampling rate	40MHz
Scope resolution	8 bit
Signal generator	Variable
External trigger	-
Arbitrary waveform generator	Yes
Digital analyser	
Connections	9-way D-sub (8 channels), 2mm sockets (8 channels, clock, trigger)
Sample rate	1MS/s to 24MS/s
Triggering	Rising or falling edge, multiple channels, external trigger
Serial decoding	I^2C, SPI, Async, USB, CAN, 1Wire, PS/2, SMBus, I^2S
PC interface	
Connections	9-way D-sub (0V, 8 channels)
Clock speed	4MHz
Program memory	24kB
Data memory	1kB ports RAM, 1kB program RAM, 256 bytes EEPROM
USB	USB2.0 full speed, 12Mbits/s
Communication	USART, MSSP (I^2C, SPI)
Analogue to digital	2 channels, 10 bit
Timers	1 x 8 bit, 3 x 16 bit
Outputs	PWM, 8 bit analogue to digital converter
Physical	
Dimensions	Width 374mm, height 204mm (standard) 66mm (compact), depth 241mm
Temperature range	In use - 0°C to +40°C, for storage -10°C to +70°C
Weight	2.8kg without PSU, 3.6kg with PSU
Included accessories	Universal PSU, IEC mains cable, 2 x oscilloscope probes, USB A-B cable, 10 x 2mm - micro-clip test leads, 25 x plastic mounting pillars, multimeter, software CD ROM

Warnings

The Electronic Workstation can operate with hazardous voltages which can result in electric shock or other potentially fatal injuries.

- Disconnect all power sources before working on this equipment
- Do not operate the equipment with case open
- Avoid all contact with the connector terminals when any power sources are connected
- Ensure all wiring is in good condition and correctly terminated

Matrix Technology Solutions Ltd.
33 Gibbet Street
Halifax
HX1 5BA

t: +44 (0)1422 252380
e: sales@matrixtsl.com

www.matrixtsl.com