FAULT FINDING IN ELECTRONIC CIRCUITS

CP9333

Inspiring The Next Generation Of Engineers

www.matrixtsl.com

Copyright © 2025 - 2026 Matrix Technology Solutions Limited

Contents

Student handout	3
Introducing to fault finding	4
Exercises	10
Exercise 1 - Logic system	11
Exercise 2 - Counter	12
Exercise 3 - DC power supply	13
Exercise 4 - Transistor amplifier	14
Exercise 5 - Motor controller	15

Copyright © 2025 - 2026 Matrix Technology Solutions Limited

STUDENT HANDOUT

Copyright © 2025 - 2026 Matrix Technology Solutions Limited

Introducing to Fault Finding

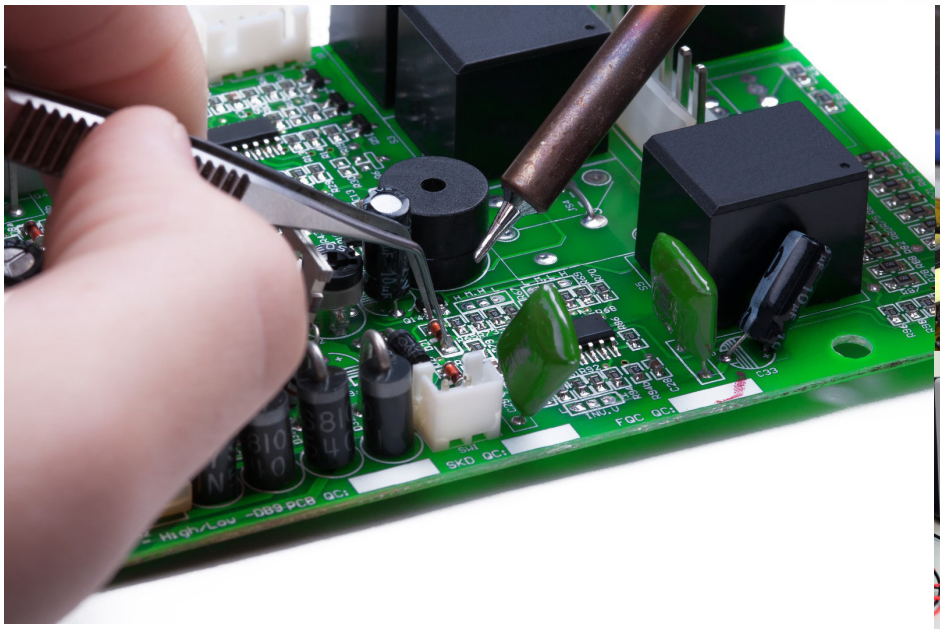

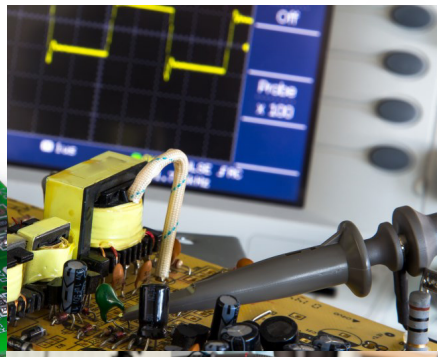

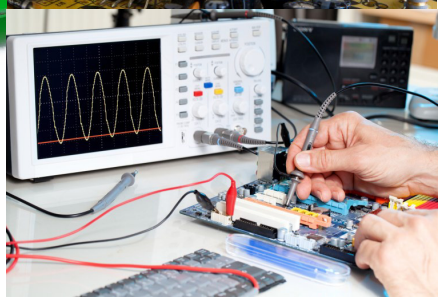

Designing an electronic system is one thing - checking that it works, time after time, in a production setting is quite another. Both are equally challenging and equally rewarding. Both require a solid understanding of the underlying electronics theory.

Successful fault finding calls for an additional skill set, including the ability to:

- Devise a plan;
- Think logically;
- Select and use a range of test equipment;
- Make a detailed record of the process.

In this field, nothing is more valuable than experience. The exercises you will be working through aim to start off the process of building that experience.

Like all training, the scenarios are artificial, designed to simplify complex situations to focus on particular aspects. In particular, these exercises come with two important rules:

You are not allowed to:

- Dismantle the circuit;
- Isolate any component in it for testing.

In fault finding, time is of the essence, for a number of reasons:

- The electronic system may play a part in keeping your work colleagues safe. While it is faulty, their safety must not be compromised.
- It may be an expensive piece of equipment.
- While down, creation of further products, and hence wealth creation, stops.
- You have been brought in as an outside contractor to find and resolve the fault in the system. The company wants the problem resolving quickly - they are being charged ‘by the hour’.

Copyright © 2025 - 2026 Matrix Technology Solutions Limited

Introducing to Fault Finding

Five Steps to Fault Finding

- **Step 1 - Prepare**
- Are there any safety issues?
- What test equipment do you intend to use?
- Document your findings!

- **Step 2 - Observe**
- Are there signs of damage - overheated components, melted insulation, frayed wire, bad solder joints?
- Can you smell burning or overheating?
- Take voltage measurements from a working circuit.
- Take voltage measurements from the faulty circuit to compare.
- Document your findings!

- **Step 3 - Identify the problem subsystem**
- Which subsystems are operating correctly?
- Where does the problem seem to lie?
- Document your findings!

- **Step 4 - Suggest possible causes**
- Check likely components:
- Switches, fuses and bulbs tend to wear out or burn out.
- Check possible components:
- Motors, relays, inductors - components with coils - may overheat.
- Check connections:
- Look for faulty connections or loose contacts which may offer high resistance.
- Look for stray connections that can short-circuit.
- Look for breaks that create open-circuit conditions.
- Document your findings!

- **Step 5 - Test and repair**
- Be safe! Remember -
- Capacitors can store electrical charge and give electric shocks;
- Inductors can store energy in a magnetic field and give electric shocks.
- Take measurements around the circuit, but mentally predict what they should be.
- In this way, home in on the problem component(s), and replace it(them), observing all safety procedures.
- Next, re-test the system to ensure that no other faults exist.
- Document your findings!

Copyright © 2025 - 2026 Matrix Technology Solutions Limited

Introducing to Fault Finding

And, in particular, for these exercises ...

Remember the rules -
You are not allowed to:
- Dismantle the circuit;
- Isolate any component in it for testing.

- **On the working circuit:**
- Measure the power supply voltage, and notice the orientation;
- Think about the role of each component in the circuit;
- Trace the signal path through the circuit;
- Where appropriate, inject a signal from a signal source, and examine it as it passes through the system - document your investigation;
- Measure and record the DC voltage levels at the input and output of significant components.

- **On the faulty circuit:**
- Check the layout against the circuit diagram (which is correct);
- Are there any safety issues:
- High voltages;
- Components connected the wrong way round - electrolytic capacitors, LEDs, transistors, diodes, ICs etc.;
- Are there any missing, or incorrect connections?
- Measure the power supply voltage at the beginning and end of the power rails.
- Measure and record the DC voltage levels at the input and output of the components you examined in the working system;
- Where appropriate, inject a signal from a signal source, and examine it as it passes through the system - document your investigation;
- Use your results to formulate a theory as to the problem;
- Document it, with reasons for your choice;
- Present your findings to the instructor.

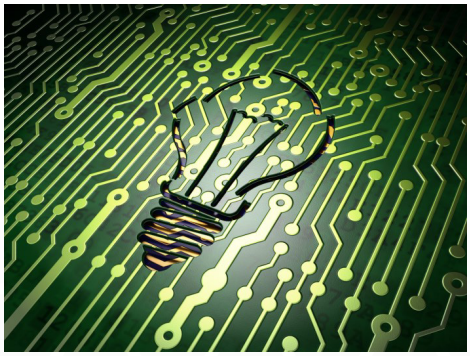

Copyright © 2025 - 2026 Matrix Technology Solutions Limited

Introducing to Fault Finding

Specific issues ...

- **Resistor:**
- Can overheat if the current is too large - may indicate incorrect value - check the colour code.

- **Potentiometer:**
- Can overheat - may indicate incorrect connection;
- Has three terminals, but the Locktronics carrier has four, and so two are joined together.

- **Electrolytic capacitor:**
- Has a working voltage (printed on casing) - should be higher than power supply voltage;
- Is polarised - must be connected the right way round, open rectangle (+) on the symbol more positive than the filled rectangle.

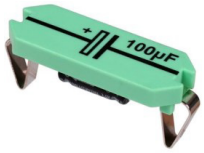

- **Diode:**
- Can overheat if the current is too large for the power rating;
- Is polarised, and passes current in one direction only.

- **Zener diode:**
- Is used in reverse bias, (anode to 0V, cathode towards positive rail);
- Then has a constant voltage across it, for a range of current.

- **LED:**
- Needs a current-limiting resistor (built into the LED carrier);
- Normally drops around 2V, (anode to cathode,) when lit.

- **Transistor:**
- Has three terminals, emitter, base and collector, but the Locktronics carrier has four, and so two are joined to the base terminal, (often the input);
- The arrow on the emitter indicates normal current flow direction;
- 'NPN' transistor - collector nearer the positive rail and emitter nearer the 0V rail;
- 'PNP' transistor - the other way round;
- Is a current amplifiers - collector current is much bigger than base current;
- Has a voltage drop of around 0.6 to 0.7V between base and emitter when conducting;
- Has a collector - emitter voltage of
- Around 0.2V when saturated (turned on completely);
- Close to the full supply voltage when turned off completely.

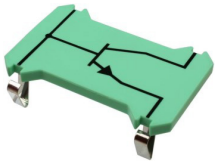

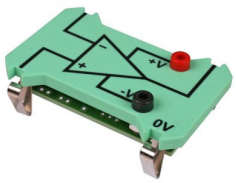

- **Chip carrier:**
- May require additional power supply connections.

Copyright © 2025 - 2026 Matrix Technology Solutions Limited

Introducing to Fault Finding

The tool-box

Multimeters

Digital versions, called DMMs (digital multimeters) are now much more common (and cheaper) than analogue multimeters. Essential items in the fault-finding toolbox, (two even better than one,) they allow you to measure both voltage and current. Although they offer this for both AC and DC, usually DC measurement is sufficient.

(Symbols - DC→⎓ AC→∿)

They also measure resistance, over a huge range, and may have a built-in continuity tester (giving an audible tone for low resistance). Other functions (e.g. transistor tester, capacitance meter and frequency meter) are useful, not essential.

Signal Source

In circuits that process AC signals, such as audio amplifiers, it helps to have a reliable, continuous AC signal source. The output frequency must match that expected by the circuit. A radio receiver needs a RF (radio frequency) signal source, whereas an audio amplifier needs AF (audio frequency). Signal sources, also known as signal generators, or function generators, usually have controls to adjust the output frequency and amplitude and may offer the ability to add a DC signal to the output, (known as a DC offset,) useful when testing amplifier circuits. Where there is a square wave output, it can be used to provide a clock signal for sequential digital circuits.

Oscilloscope

To test amplifier and many logic circuits, an oscilloscope is almost essential to view the varying signals.

It can be a peripheral device, attached to a computer, such as the 'PicoScope' in the photograph, or a self-contained device, either hand-held and portable, or mains-powered and bench-based.

A logic analyser is similar, but dedicated to looking at digital signals, whereas an oscilloscope uses an analogue-to-digital converter (ADC) to create accurate voltage/time graphs of the signal. The logic analyser can monitor hundreds of signals, whereas most oscilloscopes look at a maximum of four.

Warning: An oscilloscope cannot be used in the same way as a multimeter (unless it is a self contained hand-held unit), since one probe terminal is connected to mains safety earth. This may lead to an unwanted short-circuit in the system under test.

Copyright © 2025 - 2026 Matrix Technology Solutions Limited

Introducing to Fault Finding

When and how to use them ...

- **Multimeter:**
- Always useful, especially for measuring the DC voltage drop across terminals of a component - if there is a voltage drop, there must be a current flowing! Voltage measurement is non-intrusive - simply connect the multimeter, set to the correct voltage range, in parallel with the terminals.
- Current measurement can be tricky! Many multimeters have an internal fuse which may have 'blown' earlier, because of misuse. Current measurement involves breaking a connection and connecting the two ends created to the ammeter terminals on the multimeter.
- Can be used to measure the resistance of a component , or circuit, but only when it is isolated from the power supply. (To keep within the rules of these exercises, the only use for the resistance function is to measure the resistance between the power rails when the power supply is disconnected. This allows you to distinguish between an open-circuit and a short-circuit.)

- **Signal source:**
- Provides a test signal for a circuit which processes analogue signals.
- To begin with, keep the amplitude small, to avoid saturating transistors.
- Start with a frequency that is not challenging for the circuit. For example, with audio systems, the expected frequency range is from 20Hz to 20kHz. Some systems may struggle to deliver performance at either end of this range, so initially choose a mid-range frequency such as 1kHz.
- Where there is a choice of signal type, e.g. sine, triangle, square, choose sine wave. It is the simplest, containing just a single frequency, whereas the others include a series of high frequency components.
- Where the signal generator provides DC offset, make sure that it is set to zero, unless you specifically want it (to provide DC bias for a transistor, for example.)

- **Oscilloscope:**
- Provides a voltage/time graph of time-varying signals, such as sine waves.
- Is used much like the multimeter, with its probes connected in parallel with the component terminals under investigation. However, heed the warning on the previous page, that one probe may be connected to 0V, and may short-circuit the signal or power supply in the system under test.
- The time base is set to match the frequency of the signal. For example, when using a 1kHz sine wave signal, a time base setting of 0.5ms/cm is suitable.
- Start with the 'Y-amplitude' (names vary) or vertical voltage sensitivity set to a fairly high value, such as 5V/cm. It can be adjusted down when the signal is found and stable.
- May provide a file storage facility for you to preserve the signal for later inclusion in your documentation.

Copyright © 2025 - 2026 Matrix Technology Solutions Limited

EXERCISES

Copyright © 2025 - 2026 Matrix Technology Solutions Limited

EXERCISES

Exercise 1 - Logic System

Electronic logic systems make decisions based on information supplied in the form of binary numbers, a series of 0's and 1's.The system studied here could be used to control a car alarm. When any sensor is activated, the alarm is triggered. Similar systems control household objects, like toasters, microwaves or even Christmas lights.

Combined together in huge numbers, these logic functions form large scale digital systems, like computers and digital televisions.

Over to you:

In this worksheet we are using combinational logic; a NOR gate and a NOT gate. Build the circuit as instructed below and test what the switches do. Note down the sequence so that when a fault is introduced you can determine which area of the circuit is no longer working.

Circuit diagram:

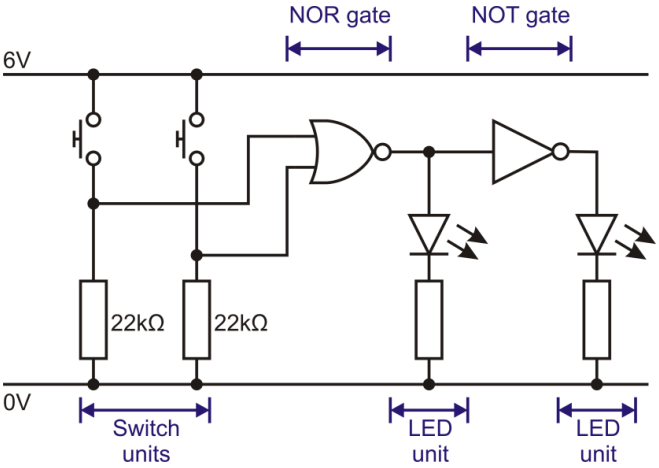

Layout diagram:

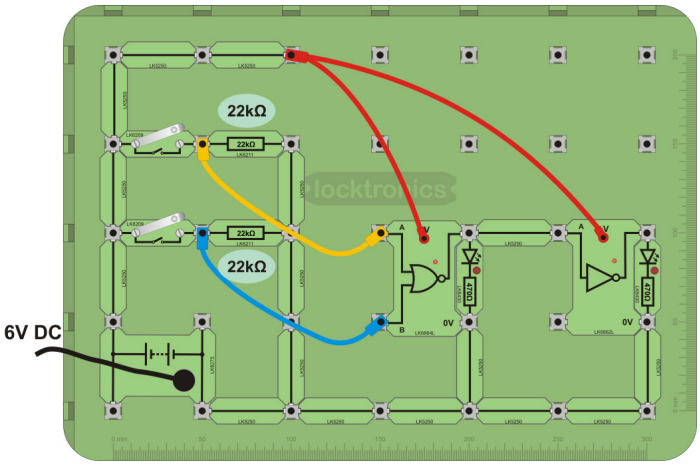

Considerations:

- All signals are digital - either logic 0 (<30% of supply voltage, VS) or logic 1 (>70% of VS).
- When pressed, a switch outputs a logic 1 signal. When not pressed, it outputs logic 0.
- A NOR gate outputs logic 0 when either input receives a logic 1 signal.
- A NOT gate outputs the opposite state to its input.
- A LED lights when the output is logic 1.

Don't forget the rules:
You are not allowed to dismantle the circuit or isolate any component in it for testing.

Copyright © 2025 - 2026 Matrix Technology Solutions Limited

EXERCISES

Exercise 2 - Counter

The picture shows a machine that counts bank notes - something that must be done accurately! Previously, this was done by a cashier, but humans make mistakes, and can count only slowly. This counter can count a thousand notes each minute - precisely!

Electronic counters are used to count everything from votes, to eggs, to pharmaceutical pills, spectators at a football match and many more.

Over to you:

In this worksheet we are using D-type flip-flops to create a simple counter. Connect the circuit and observe its operation. Before a fault is introduced, ensure you correctly understand its operation and have noted down data from any relevant measurements. Allow a fault to be introduced and determine which area of the circuit is no longer working, and why.

Circuit diagram:

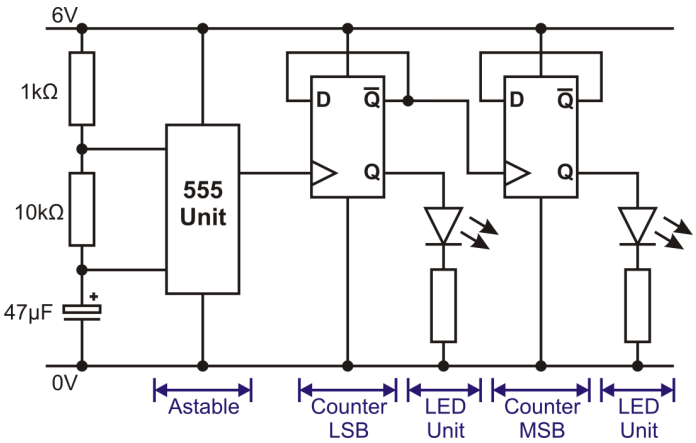

Layout diagram:

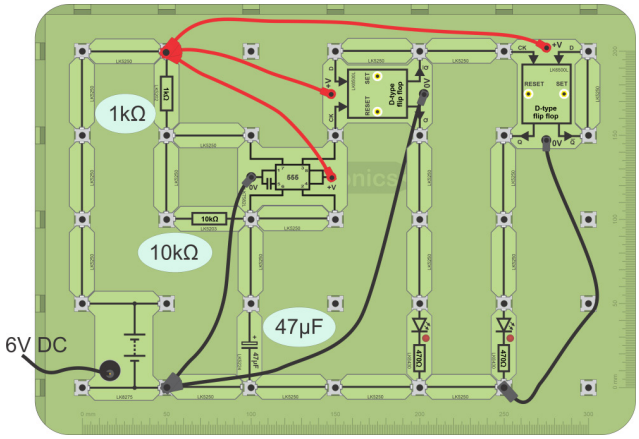

Considerations:

- This is a two-stage binary counter, capable of counting up to 112 (=3 in decimal.) Each stage is formed by a D-type bistable. The first generates the least-significant-bit, (LSB), meaning the 'units' value. The second stage generates the most-significant-bit, (MSB).
- The clock pulses are provided by a 555 timer in astable mode. The pulse frequency is set at around 1.6Hz, by the 1kΩ and 10kΩ resistors, and the 47µF capacitor.
- The output of the counter is displayed on the LEDs. A LED lights when the output of that stage is logic 1.
- The 'Set' and 'Reset' inputs on the D-type bistables are not needed in this application.

Don't forget the rules:
You are not allowed to dismantle the circuit or isolate any component in it for testing.

Copyright © 2025 - 2026 Matrix Technology Solutions Limited

EXERCISES

Exercise 3 - DC Power Supply

A DC power supply converts high-voltage AC electrical power, generated and transmitted by power stations, into low-voltage DC for electronic systems such as computers, mobile phones and e-readers. This approach delivers much cheaper electrical energy than using non-rechargeable batteries.

This exercise looks at a circuit at the core of many of these DC power supplies, designed to deliver an output voltage which is:

- Smooth (no AC components),
- Steady (same voltage for all currents),
- Immune to small changes in the AC supply voltage.

Over to you:

In this worksheet we will convert an AC signal into a 'smoothed' DC output, which will power our bulb. We are no longer working only with digital signals, but with AC also, so it's essential you use an oscilloscope to help analyse the circuit operation. Ensure you fully understand the circuit before a fault condition is introduced. Work to diagnose the fault based on knowledge of the working example.

Circuit diagram:

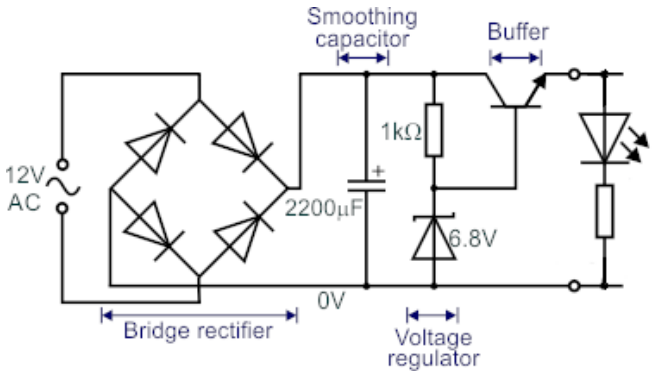

Layout diagram:

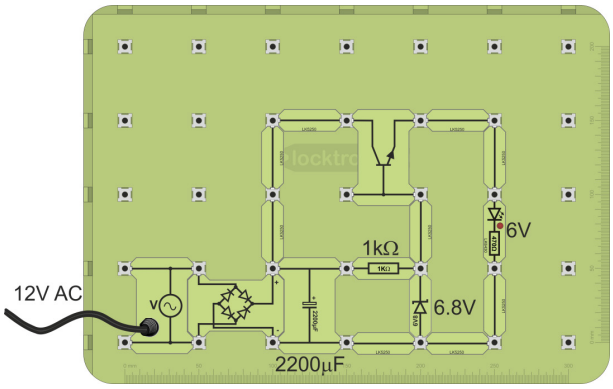

Considerations:

- The bridge rectifier is the component that converts AC to DC voltage.
- Despite the rectifier, a smoothing capacitor is used to 'smooth' the DC output waveform in the circuit.
- The voltage across the Zener diode should be clamped at 6.8V.
- You will lose a small voltage across the transistor base-emitter junction. Take this into consideration.

Don't forget the rules:
You are not allowed to dismantle the circuit or isolate any component in it for testing.

Copyright © 2025 - 2026 Matrix Technology Solutions Limited

EXERCISES

Exercise 4 - Transistor Amplifier

Many sensors - microphones, opto-sensors, thermocouples etc. produce signals which are too small to use directly.

Amplifiers are used to increase the amplitude of these signals, while retaining their other characteristics.

At the heart of most of these amplifiers is the transistor, a tiny solid-state device able to amplify signals by using a small current to control a much bigger one.

Over to you:

In this worksheet we are using a transistor to amplify our small 200mV signal. We want to be able to produce an audible noise on our speaker. Connect the circuit as shown in the images and use a signal generator to provide an AC signal. Ensure you fully understand the circuit operation before you introduce any faults.

Circuit diagram:

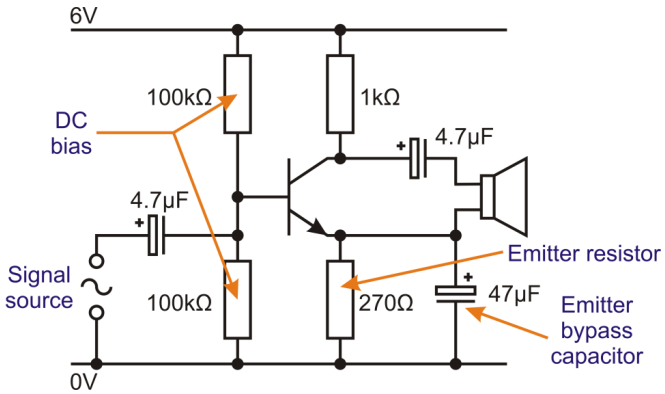

Layout diagram:

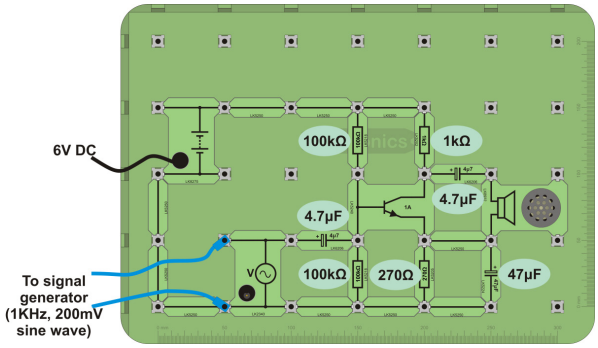

Considerations:

- The two 100kΩ resistors form a voltage divider to provide the DC bias voltage at the base of the transistor so that it conducts even when no signal is present. As a result, the output voltage should be around half of the supply voltage when there is no signal present.
- The 270Ω emitter resistor provides negative feedback that keeps the amplifier performance stable. Should the output (collector) current increase, the voltage across this resistor increases, reducing the DC bias voltage at the base and so reducing the output current.
- The emitter resistor reduces the voltage gain of the amplifier. The emitter bypass capacitor (47μF) allows the AC signal current to flow around the emitter resistor, preserving AC voltage gain.
- The two 4.7μF capacitors block any DC voltages present in the signal from affecting the operation of the transistor.

Don't forget the rules:
You are not allowed to dismantle the circuit or isolate any component in it for testing.

Copyright © 2025 - 2026 Matrix Technology Solutions Limited

EXERCISES

Exercise 5 - Motor Controller

The simplest motor controller is a switch - the motor is on or off. For more sophisticated motor speed control, a system like the one in this exercise can be used.

Speed controllers are used in a wide range of appliances, from washing machines, DIY drills and even toy car racing games.

Over to you:

In this worksheet we have created a circuit that allows us to control both the direction and speed of a motor using a simple potentiometer. Analyse the circuit, note its normal operating conditions and introduce a fault.

Circuit diagram:

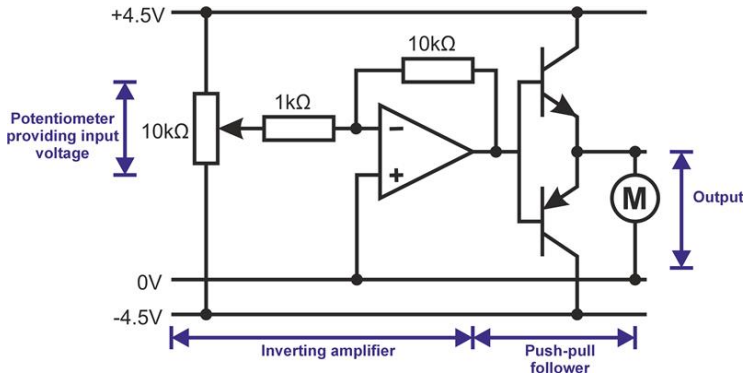

Layout diagram:

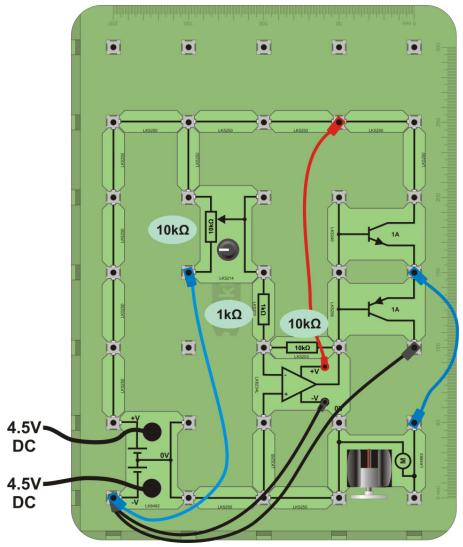

Considerations:

- The 10kΩ potentiometer can change the input voltage within the range +4.5V to -4.5V.
- The inverting amplifier has a voltage gain of -10, so the output should be ten times bigger than the input voltage and inverted (provided the output is not saturated).
- The op-amp requires a positive supply of +4.5V, and a negative supply of -4.5V in this arrangement. Its non-inverting input ('+') is connected to 0V.
- The push-pull follower copies this voltage to the motor (apart from dropping 0.7V between base and emitter of the conducting transistor.)
- When the output of the inverting amplifier is bigger than +0.7V, the NPN transistor conducts. When it is less than -0.7V (e.g. -1.0V,) the PNP transistor conducts. The small current drawn from the inverting amplifier controls a much bigger current flowing from the power supply to the motor.

Don't forget the rules:
You are not allowed to dismantle the circuit or isolate any component in it for testing.

Copyright © 2025 - 2026 Matrix Technology Solutions Limited

FAULT FINDING IN ELECTRONIC CIRCUITS

CP9333

www.matrixtsl.com

Matrix Technology Solutions
The Factory, 33 Gibbet Street, Halifax, HX1 5BA, United Kingdom
t: +44 (0) 1422 252380 e: sales@matrixtsl.com